ELIPTICAL LOCKING NUTS - BLACKTIP CUSTOM

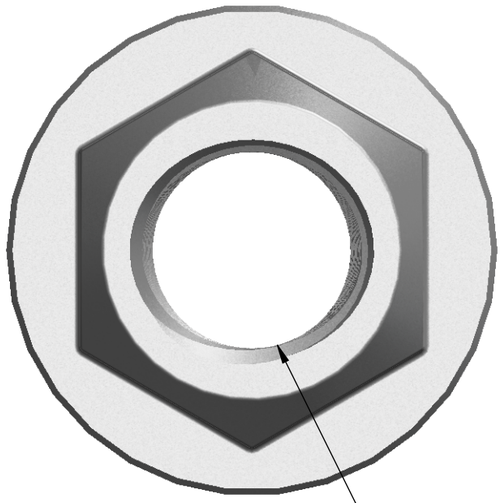

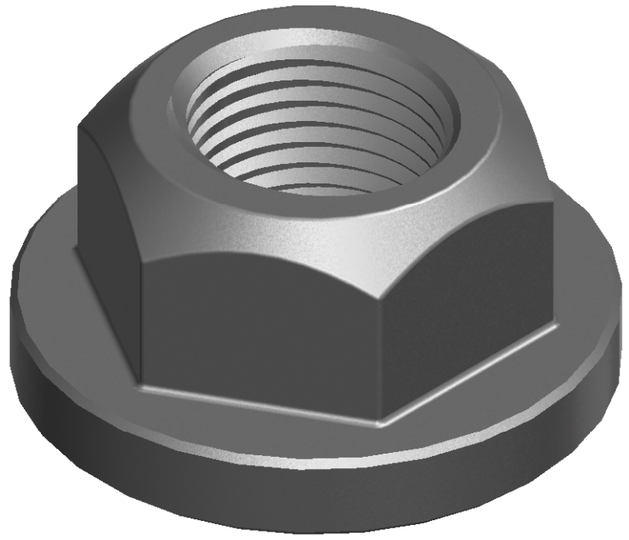

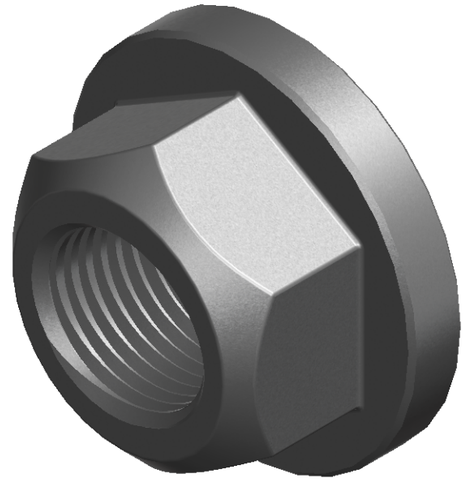

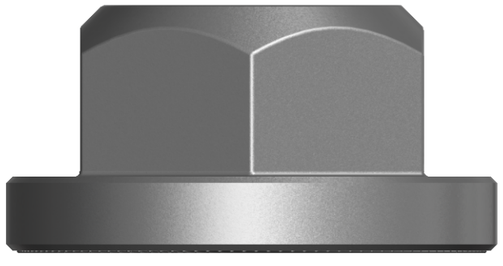

BLACKTIP CODE EXPLANATION

F - N C 3/4 - EF

FASTENER / NUT / UNC / SIZE / ELLIPTICAL FLARED

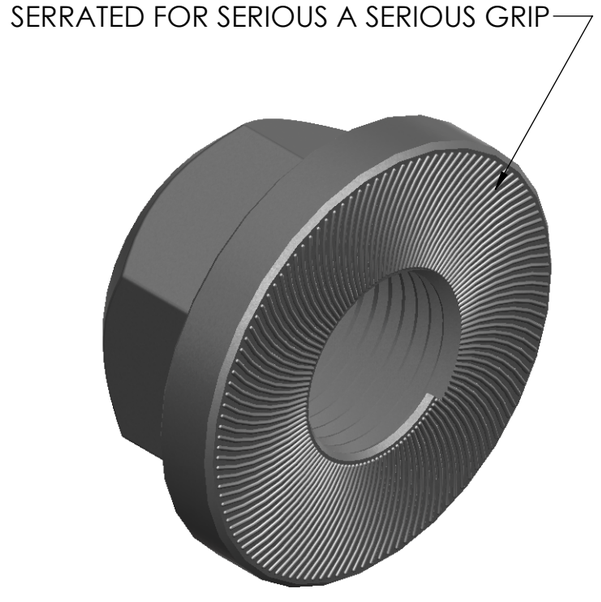

- Elliptical nuts are used in place of cone lock nuts
- Elliptical nuts are generally considered to be more reliable than cone lock nuts
- Generally elliptical nuts can be re-used more than once
- BLACKTIP's own built in serrated washer makes this nut a great option for hard and high impact work
- We sell thousands of these - primarily to the grinding,mining and earthmoving industry
- Available in 3/4 UNC, 7/8UNC,1" UNC,1"UNF,1-1/4"UNF

BLACKTIP WEARPARTS

ITEM CODE.	F - NXX/X - EF
DESCRIPTION:	ELLIPTICAL OFFSET LOCKING NUTS